Centre No.						Paper Reference							Surname	Initial(s)
Candidate No.						6	6	7	5	/	0	1	Signature	

Paper Reference(s)

6675/01

Edexcel GCE

Further Pure Mathematics FP2

Advanced/Advanced Subsidiary

Friday 22 June 2007 – Morning

Time: 1 hour 30 minutes

Examiner's use only

Team Leader's use only

Question Number	Leave Blank
1	
2	
3	
4	
5	
6	
7	
8	
Total	

Materials required for examination	Items included with question papers
Mathematical Formulae (Green)	Nil

Candidates may use any calculator allowed by the regulations of the Joint Council for Qualifications. Calculators must not have the facility for symbolic algebra manipulation, differentiation and intergration, or have retrievable mathematical formulas stored in them.

Instructions to Candidates

In the boxes above, write your centre number, candidate number, your surname, initials and signature.
Check that you have the correct question paper.
Answer ALL the questions. Write your answers in the spaces provided in this question paper.
When a calculator is used, the answer should be given to an appropriate degree of accuracy.

Information for Candidates

A booklet 'Mathematical Formulae and Statistical Tables' is provided.
Full marks may be obtained for answers to ALL questions.
The marks for individual questions and the parts of questions are shown in round brackets: e.g. **(2)**.
There are 8 questions in this question paper. The total mark for this paper is 75.
There are 24 pages in this question paper. Any blank pages are indicated.

Advice to Candidates

You must ensure that your answers to parts of questions are clearly labelled.
You should show sufficient working to make your methods clear to the Examiner.
Answers without working may not gain full credit.

This publication may be reproduced only in accordance with Edexcel Limited copyright policy.
©2007 Edexcel Limited.

Printer's Log. No.
N26112A
W850/R6675/57570 3/3/3/3

N 2 6 1 1 2 A 0 1 2 4

Turn over

edexcel
advancing learning, changing lives

https://xtremepape.rs/

Leave blank

1. Evaluate $\int_1^3 \frac{1}{\sqrt{(x^2+4x-5)}}\,dx$, giving your answer as an exact logarithm.

(5)

N 2 6 1 1 2 A 0 2 2 4

https://xtremepape.rs/

Leave blank

Question 1 continued

(Total 5 marks)

Q1

N 2 6 1 1 2 A 0 3 2 4

Turn over

https://xtremepape.rs/

Leave blank

2. The ellipse D has equation $\frac{x^2}{25}+\frac{y^2}{9}=1$ and the ellipse E has equation $\frac{x^2}{4}+\frac{y^2}{9}=1$.

(a) Sketch D and E on the same diagram, showing the coordinates of the points where each curve crosses the axes.

(3)

The point S is a focus of D and the point T is a focus of E.

(b) Find the length of ST.

(5)

N 2 6 1 1 2 A 0 4 2 4

https://xtremepape.rs/

Leave blank

Question 2 continued

(Total 8 marks)

Q2

N 2 6 1 1 2 A 0 5 2 4

Turn over

https://xtremepape.rs/

Leave blank

3. The curve C has equation

$$y = \frac{1}{4}(2x^2 - \ln x), \quad x > 0 .$$

Find the length of C from $x = 0.5$ to $x = 2$, giving your answer in the form $a + b \ln 2$, where a and b are rational numbers.

(7)

N 2 6 1 1 2 A 0 6 2 4

https://xtremepape.rs/

Leave blank

Question 3 continued

(Total 7 marks)

Q3

N 2 6 1 1 2 A 0 7 2 4

Turn over

https://xtremepape.rs/

Leave blank

4. (a) Starting from the definitions of cosh and sinh in terms of exponentials, prove that

$$\cosh(A - B) = \cosh A \cosh B - \sinh A \sinh B .$$

(3)

(b) Hence, or otherwise, given that $\cosh(x - 1) = \sinh x$, show that

$$\tanh x = \frac{e^2 + 1}{e^2 + 2e - 1}.$$

(4)

N 2 6 1 1 2 A 0 8 2 4

https://xtremepape.rs/

Leave blank

Question 4 continued

(Total 7 marks)

Q4

N 2 6 1 1 2 A 0 9 2 4

Turn over

https://xtremepape.rs/

Leave blank

5. The curve C has parametric equations

$$x = t - \sin 2t,$$
$$y = \cos 2t, \qquad 0 \leqslant t < \pi.$$

(a) Find, in terms of $\cos 2t$ only, an expression for the radius of curvature of C.

(6)

(b) Write down the least value of y and hence find the radius of curvature of C at the point where y has this least value.

(2)

N 2 6 1 1 2 A 0 1 0 2 4

https://xtremepape.rs/

Leave blank

Question 5 continued

(Total 8 marks)

Q5

N 2 6 1 1 2 A 0 1 1 2 4

Turn over

https://xtremepape.rs/

Leave blank

6. Given that

$$I_n = \int_0^8 x^n (8-x)^{\frac{1}{3}}\,\mathrm{d}x, \quad n \geqslant 0,$$

(a) show that $I_n = \dfrac{24n}{3n+4} I_{n-1}, \quad n \geqslant 1.$

(6)

(b) Hence find the exact value of $\int_0^8 x(x+5)(8-x)^{\frac{1}{3}}\,\mathrm{d}x.$

(6)

N 2 6 1 1 2 A 0 1 2 2 4

https://xtremepape.rs/

Leave blank

Question 6 continued

https://xtremepape.rs/

Leave blank

Question 6 continued

N 2 6 1 1 2 A 0 1 4 2 4

https://xtremepape.rs/

Leave blank

Question 6 continued

(Total 12 marks)

Q6

N 2 6 1 1 2 A 0 1 5 2 4

Turn over

https://xtremepape.rs/

Leave blank

7.

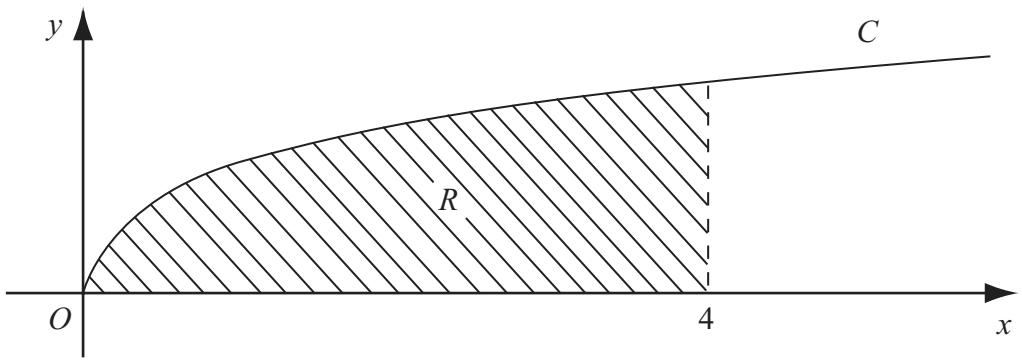

Figure 1

Figure 1 shows part of the curve C with equation

$$y = \operatorname{arsinh}\left(\sqrt{x}\right), \quad x \geqslant 0.$$

(a) Find the gradient of C at the point where $x = 4$.

(3)

The region R, shown shaded in Figure 1, is bounded by C, the x-axis and the line $x = 4$.

(b) Using the substitution $x = \sinh^2 \theta$, or otherwise, show that the area of R is

$$k \ln\left(2+\sqrt{5}\right) - \sqrt{5},$$

where k is a constant to be found.

(10)

N 2 6 1 1 2 A 0 1 6 2 4

https://xtremepape.rs/

Leave blank

Question 7 continued

https://xtremepape.rs/

Leave blank

Question 7 continued

N 2 6 1 1 2 A 0 1 8 2 4

https://xtremepape.rs/

Leave blank

Question 7 continued

Q7

(Total 13 marks)

https://xtremepape.rs/

Leave blank

8. The points $P(ap^2, 2ap)$ and $Q(aq^2, 2aq)$, $p \neq q$, lie on the parabola C with equation $y^2 = 4ax$, where a is a constant.

(a) Show that an equation for the chord PQ is

$$(p + q)\, y = 2(x + apq)\ .$$

(3)

The normals to C at P and Q meet at the point R.

(b) Show that the coordinates of R are

$$(a(p^2 + q^2 + pq + 2), -\, apq(p + q))\ .$$

(7)

Given that the points P and Q vary such that PQ always passes through the point $(5a, 0)$,

(c) find, in the form $y^2 = \mathrm{f}(x)$, an equation for the locus of R.

(5)

N 2 6 1 1 2 A 0 2 0 2 4

https://xtremepape.rs/

Leave blank

Question 8 continued

https://xtremepape.rs/

Leave blank

Question 8 continued

N 2 6 1 1 2 A 0 2 2 2 4

https://xtremepape.rs/

Leave blank

Question 8 continued

https://xtremepape.rs/

Leave blank

Question 8 continued

Q8

(Total 15 marks)

TOTAL FOR PAPER: 75 MARKS

END

N 2 6 1 1 2 A 0 2 4 2 4

https://xtremepape.rs/